ROUGH TERRAIN SCISSOR LIFTS

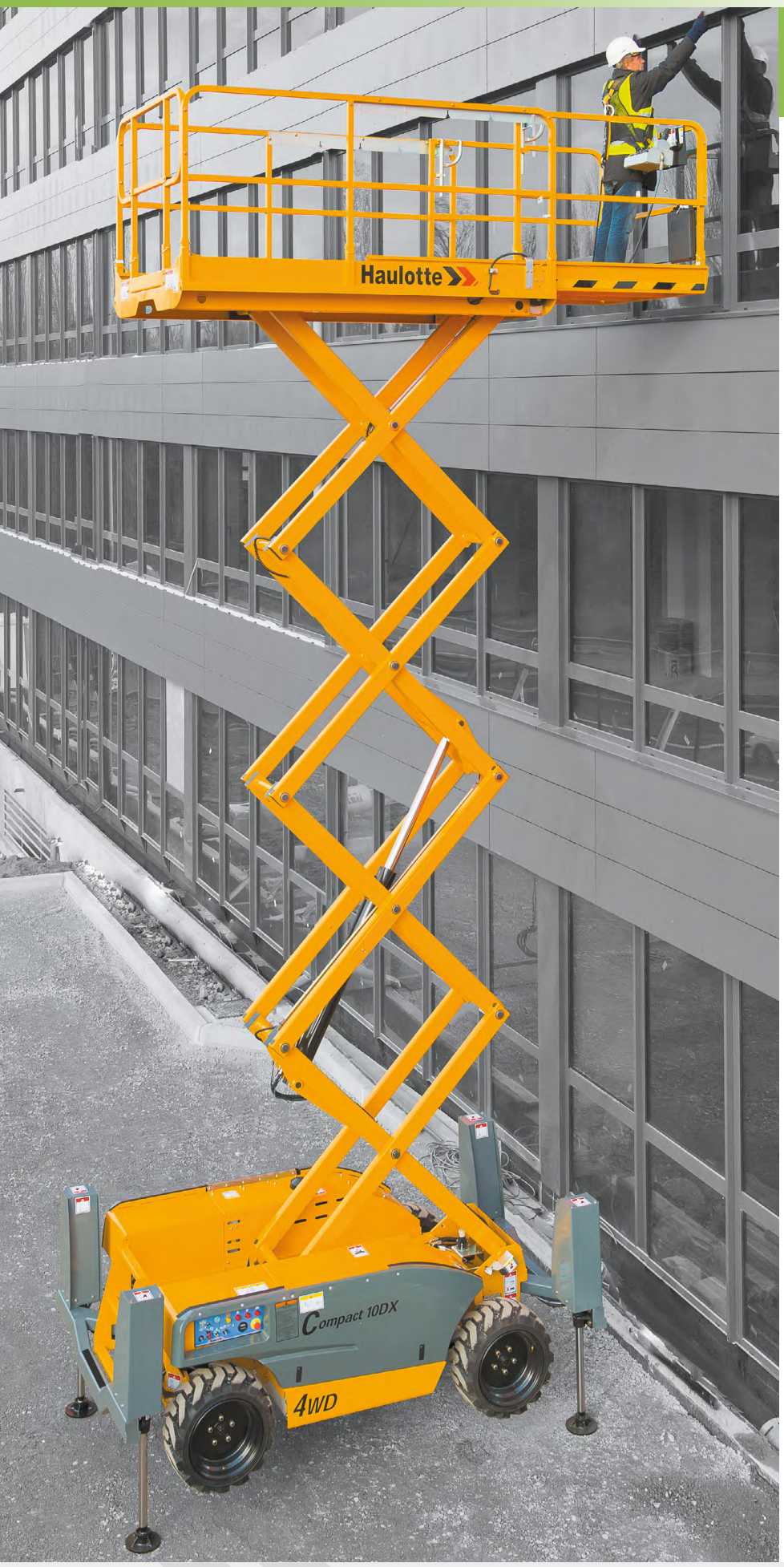

COMPACT 10 / 12 DX

OUTSTANDING ROUGH TERRAIN DRIVING FEATURES

- 4 wheel drive
- Automatic differential lock
- Excellent gradeability (40 %)
- Ground clearance of 28 cm

ROBUST AND EASY TO MAINTAIN

- Outriggers positioned within the machine footprint
- Durable and reliable upper control box
- Optimized accessibility to components
- Built-in diagnostic tool

EXCEPTIONAL PRODUCTIVITY

- Fully proportional controls
- Narrow turning radius
- One switch to deploy and retract 4 outriggers

COMPACT 10 / 12 DX

ROUGH TERRAIN SCISSOR LIFTS

TECHNICAL DATA

	COMPACT 10 DX	COMPACT 12 DX
Working height	10.28 m	12.06 m
Platform height	8.28 m	10.06 m
Lift capacity	565 kg (3 pers.)	450 kg (3 pers.)
Lift capacity on the extension	150 kg	150 kg
A Length	3.17 m	3.17 m
B Width	1.78 m	1.78 m
C Height - stowed	2.44 m	2.56 m
Storage height	1.59 m	1.7 m
F Platform length	2.45 m	2.45 m
Extended platform length	3.7 m	3.7 m
Platform extension length	1.2 m	1.2 m
G Platform width	1.45 m	1.45 m
D Wheelbase	1.84 m	1.84 m
E Ground clearance	28 cm	28 cm
Number of extensions	1	1
Drive speed	0.8 - 5.5 km/h	0.8 - 5.5 km/h
Maximum drive height	8.15 m	8.15 m
Turning radius - outside	3.5 m	3.5 m
Lift / lower speed	35 s / 46 s	35 s / 51 s
Engine	Kubota, 18.5 kW (Stage 5 in EU)	Kubota, 18.5 kW (Stage 5 in EU)
Gradeability	40 %	40 %
Tyres - foam-filled	26 x 12 - 16.5	26 x 12 - 16.5
Hydraulic system capacity	75 l	75 l
Weight	3 520 kg	4 110 kg

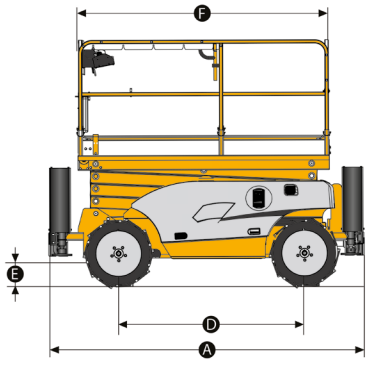

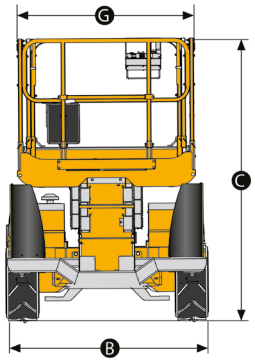

STANDARD EQUIPMENT

> 4 wheel drive, 2 wheel steer
> Brake release
> Foam filled all terrain tyres
> 1.2 m platform extension
> Removable operator's control box
> 3° tilt alarm
> Automatic levelling outriggers
> Horn
> Hourmeter
> 12 V - 74 Ah batteries
> Hydraulic brakes
> Kubota engine
> Manual platform lowering valve
> Lanyard attachment points
> Towing hooks
> Side shields

OPTIONS AND ACCESSORIES

> Non marking tyres (standard in AUS / NZ)
> 240 V power to the platform
> Swing-door gate (standard in AUS / NZ)
> Hydraulic generator 3.5 kW
> Biodegradable oil
> Cold Weather Package
> Telematics ready
> Motion alarm for movements and translation
> Travel alarm (standard in AUS / NZ)
> Rotating beacon (standard in AUS / NZ)
> Working light
> Foldable guard-rails

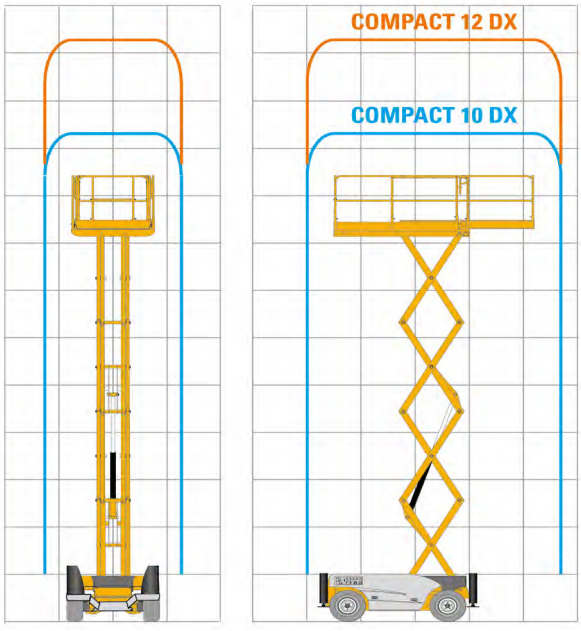

40011026730 · Non contractual document · We reserve the right to modify the technical characteristics of this document without notice · 07/2019

Haulotte Australia Pty Ltd · 46 Greens Road - VIC 3175 VIC Dandenong, Australia ·
Phone: +61 300 207 683 · Fax: +61 3 9792 1011 · salesau@haulotte.com · **www.haulotte.com.au**

Haulotte
LET'S DARE TOGETHER